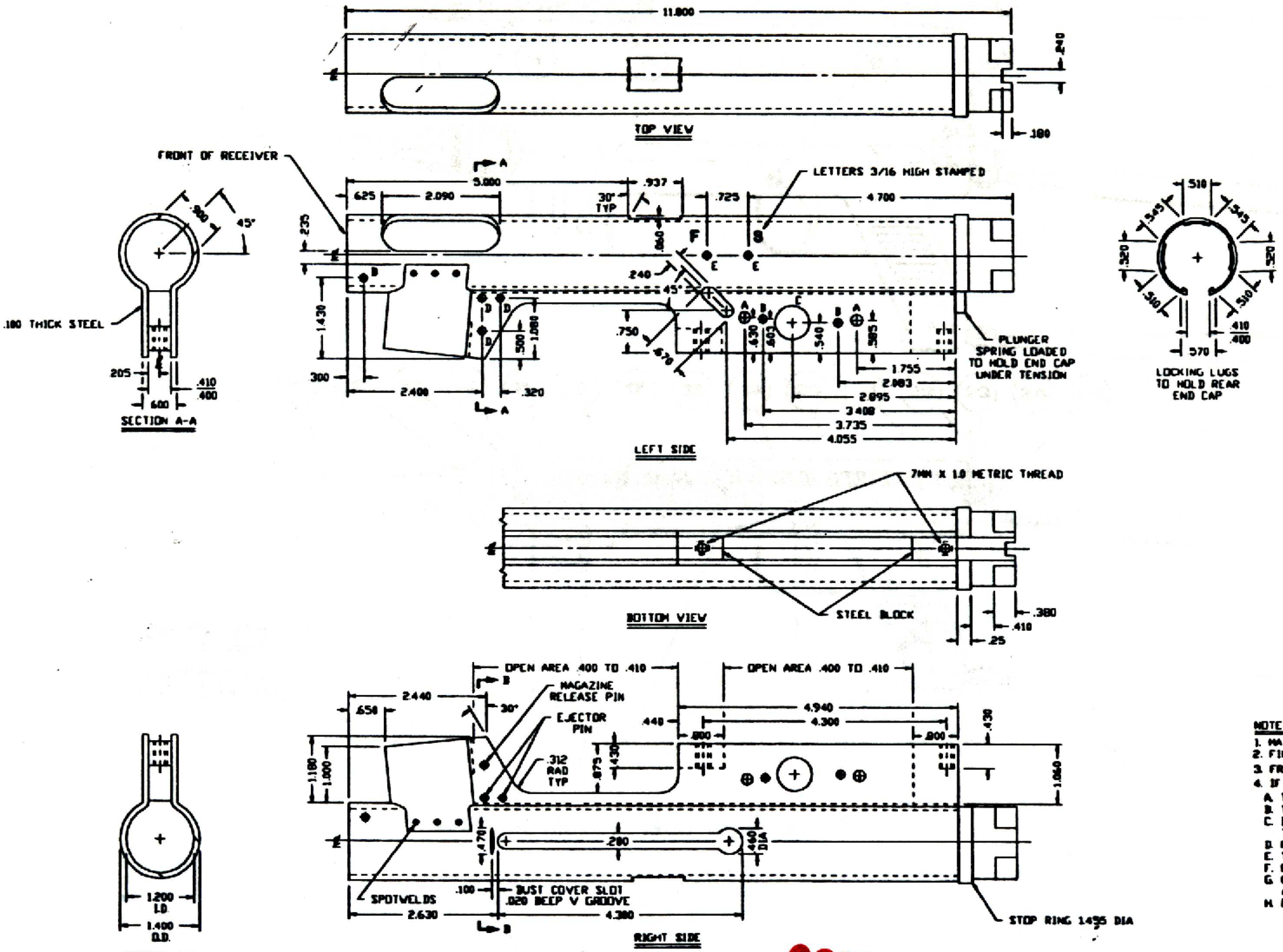

DRILL CHART

HOLE	DESCRIPTION	QTY
A	.201 DIA THRU	2
B	.145 DIA THRU	3
C	.610 DIA THRU	1
D	.135 DIA THRU	3
E	.145 DIA X .030 DEEP	2

NOTES:

1. MATERIAL- 1.500 O.D. X 1.187 I.D. STEEL D.O.M. TUBE
2. FINISH- BLUE
3. FRONT OF RECEIVER TUBE INTERNALLY THREADED TO MATCH BARREL THREAD.
4. IF REBUILDING RECEIVER USING PARTS KIT DO THE FOLLOWING
   - A. TRIM TUBING AWAY FROM TRIGGER HOUSING.
   - B. TURN TUBE (NEW) TO 1.400 OUTSIDE DIAMETER.
   - C. BORE TUBE (NEW) TO 1.200 INSIDE DIAMETER. THEN SLOT BOTTOM OF TUBE TO .410 WIDTH.
   - D. FIT TUBE TO EXISTING REMAINS.
   - E. TACK WELD IN PLACE.
   - F. FIT END CAP RETAINING END TO TUBE AND TACK WELD.
   - G. CHECK FOR ALIGNMENT WITH TRIGGER HOUSING AND BUTT STOCK BEFORE FINAL WELD.
   - H. FINISH WELD AND FINAL MACHINE.

RESTRICTED MATERIAL

CONFIDENTIAL

SCALE: FULL	MATERIAL: SEE NOTE 1	CKD	TOLERANCES
DWN	FINISH: SEE NOTE 2	DATE	
TITLE: BERETTA 38A AND 38/44 RECEIVER		REV.	ANGLES ± 0°